A & M Electric Tools

Ind	Product No.	Type	Voltage	Country
a	4000380797	PD2E24RST	220-230V	IN2

Percussion Drills

Milwaukee

PD 2E 24 RST

Exp.view No.	Version	Date	Page
4926 3807 98	0004	16.03.06	1/2

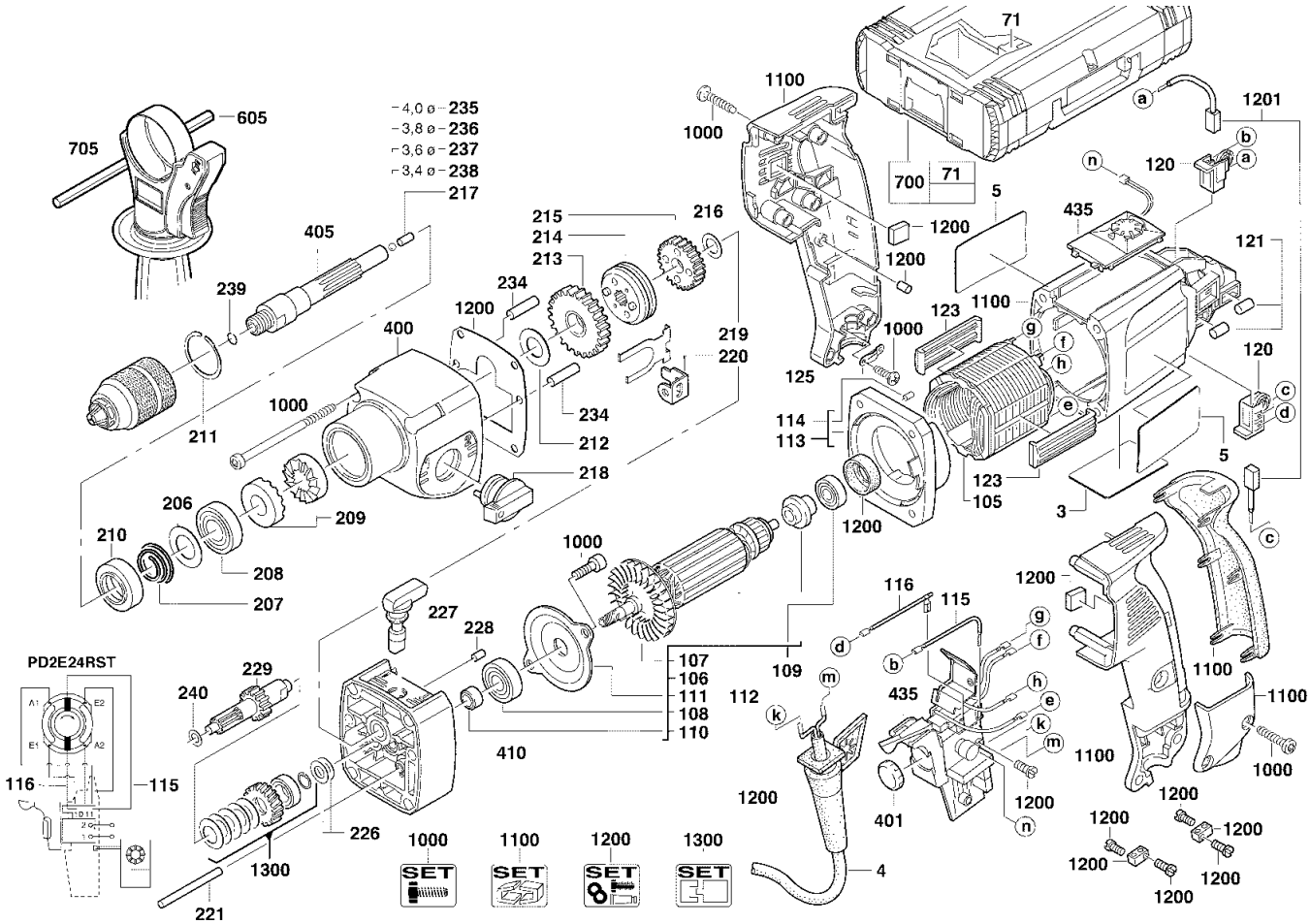

Pos	Index	Quanti	Article No.	Designation
0003	a	1	4931380800	RATING PLATE
0004	a	1	4931622896	CONNECTION CABLE
0005	a	2	4931378806	TYPE PLATE
0071	a	1	4931380081	INSERT
0105	a	1	4931342554	ELECTRIC FIELD
0106	a	1	4931364790	ARMATURE
0107	a	1	4931342793	FAN
0108	a	1	4931368037	GROOVED BALL BEAR.
0109	a	1	4931901253	BALL BEARING
0110	a	1	4931302748	SLEEVE
0111	a	1	4931267585	BEARING COVER
0112	a	1	4931331800	INSULATING DISC
0113	a	1	4931380470	AIR DEFLECTOR RING
0114	a	4	4931332524	HOLDING-DOWN DEVIC
0115	a	1	4931623349	WIRE
0116	a	1	4931623355	WIRE
0120	a	2	4931382268	BRUSH HOLDER
0121	a	4	4931623123	ROLL
0123	a	2	4931326971	CENTERING LEDGE
0125	a	1	4931256500	CABLE COLLAR
0206	a	1	4931621809	DISC
0207	a	1	4931267406	PRESSURE SPRING
0208	a	1	4931891058	BALL BEARING
0209	a	2	4931267571	PERCUSSION SLEEVE
0210	a	1	4931267522	SEAL RING
0211	a	1	4931890311	LOCKING RING
0212	a	1	4931621647	DISC
0213	a	1	4931267558	DRILL SPINDLE WHEEL
0214	a	1	4931307130	JUMPER RING
0215	a	1	4931344698	DRILL SPINDLE WHEEL
0216	a	1	4931621679	DISC
0217	a	1	4931805526	PIN
0218	a	1	4931339525	SWITCH LEVER
0219	a	1	4931307118	RETAINING SPRING
0220	a	1	4931267576	SWITCH LEVER
0221	a	1	4931621731	PIN
0226	a	2	4931623164	WASHER
0227	a	1	4931347470	SWITCH LEVER
0228	a	1	4931621770	PIN
0229	a	1	4931342887	REDUCTION GEAR
0234	a	2	4931621732	PIN
0235	a	1	4931805390	BALL
0236	a	1	4931621735	BALL
0237	a	1	4931621736	BALL

Repairs/modification and and testing of electric power tools are to be carried out by specialists. The safety regulations according to DIN/VDE/CEE/AFNOR and other regulations valid in the different countries are to be observed.

A & M Electric Tools

Ind	Product No.	Type	Voltage	Country
a	4000380797	PD2E24RST	220-230V	IN2

Percussion Drills

Milwaukee

PD 2E 24 RST

Exp.view No.	Version	Date	Page
4926 3807 98	0004	16.03.06	2/2

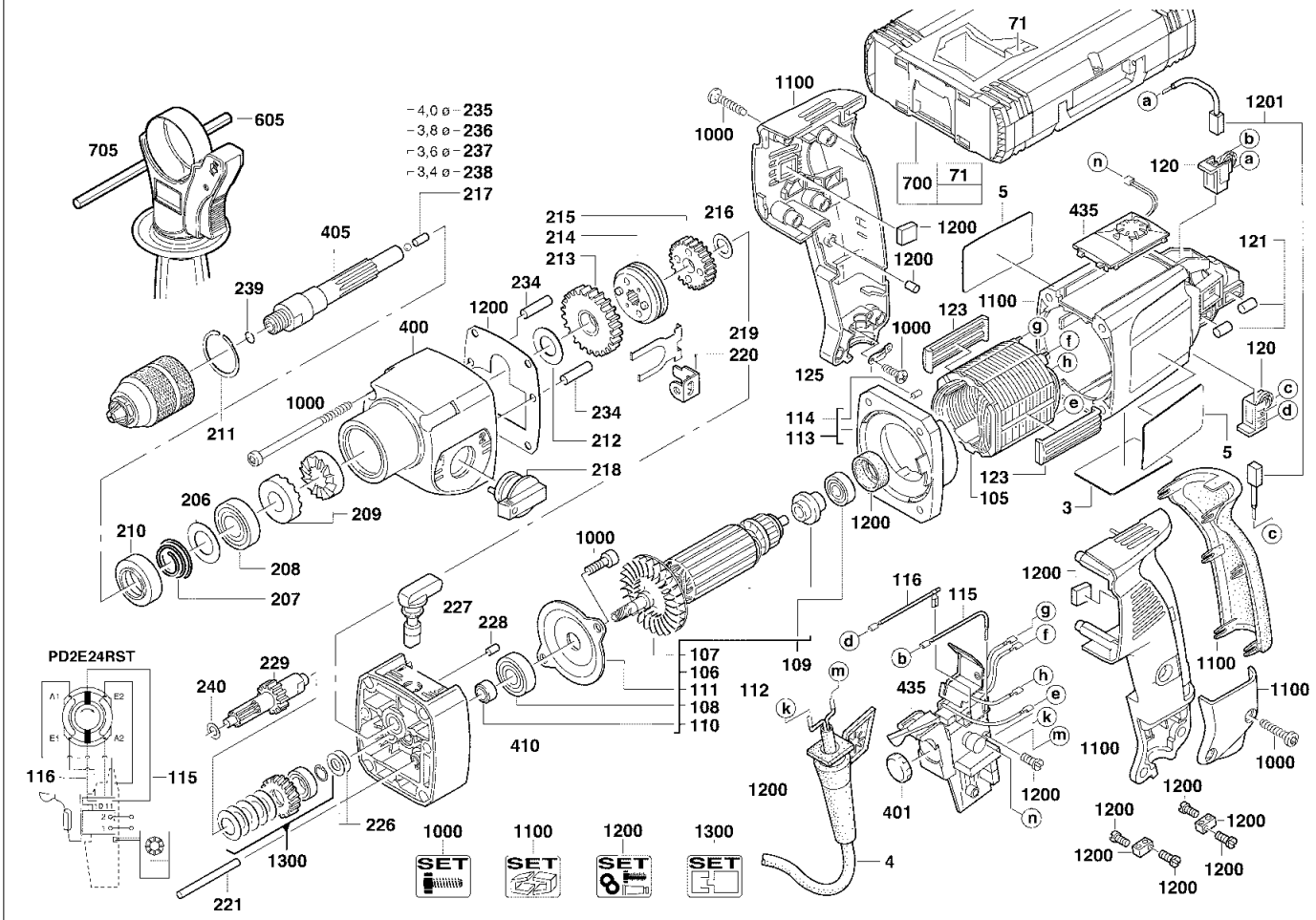

Pos	Index	Quanti	Article No.	Designation
0238	a	1	4931621737	BALL
0239	a	1	4931302074	SPRING
0240	a	1	4931621715	DISC
0400	a	1	4931380476	GEAR BOX
0401	a	1	4931356599	SET WHEEL
0405	a	1	4931307039	DRILL SPINDLE
0410	a	1	4931380475	BEARING END PLATE
0435	a	1	4931380803	ELECTRONIC ELEMENT
0605	a	1	4931384434	DEPTH GAUGE
0700	a	1	4932378986	CARRYING CASE
0705	a	1	4932373725	HANDLE
1000	a	1	4931364668	BOLT SET
1100	a	1	4931380477	BODY
1200	a	1	4931347472	MAINTENANCE SET
1201	a	1	4931392596	CARBON BRUSH SET
1300	a	1	4931347492	COUPLING SET

Pos	Index	Quanti	Article No.	Designation

Repairs/modification and and testing of electric power tools are to be carried out by specialists. The safety regulations according to DIN/VDE/CEE/AFNOR and other regulations valid in the different countries are to be observed.